FACT SHEET

WWW.CMA.ARMY.MIL

U.S. ARMY CHEMICAL MATERIALS AGENCY

Non-Stockpile Chemical Materiel Project Overview

The U.S. Army Chemical Material Agency's Non-Stockpile Chemical Materiel Project (NSCMP) provides centralized management and direction to the Department of Defense for the assessment and disposal of recovered chemical warfare materiel in a safe and environmentally sound manner.

NSCMP personnel and equipment provide support to five mission areas:

Mission Area	Support
Support to Combatant Commanders	Providing tools and tactics to support Combatant Commander needs.
Emergency Response	Provide total project management and proven transportable assessment and treatment technologies to quickly respond to unplanned CWM recoveries onsite. Such recoveries are most often in response to CWM unearthed during range clearing operations and from burial sites.
Planned Remediation	Safe, effective and environmentally sound remediation support through project management and assessment and treatment of recovered items.
Research, Development, Testing & Evaluation (RDT&E)	A robust RDT&E mission seeks to establish the most innovative and effective means to assess and treat recovered warfare materiel, both chemical and industrial, benefitting the defense, engineering, chemistry, and safety industries. This includes product improvements of existing equipment and testing and evaluation of commercial systems.
Support to Program Manager Assembled Chemical Weapons Alternatives (PM ACWA) and Chemical Materials Agency (CMA) as required	NSCMP provides flexible assessment and treatment options to chemical stockpile destruction challenges, augmenting CMA and the PM ACWA missions as needed.

For more information, contact the CMA Public Affairs Office at
(410) 436-4292
(410) 436-3629
(800) 488-0648

NS_info_NSCMPoverview_5_11.indd

Non-Stockpile Chemical Materiel Project overview (continued)

NSCMP's proven assessment technologies provide critical information onsite during chemical warfare recoveries, determining whether a munition is explosively configured or contains chemical agent. When item fills are identified, treatment technologies safely and effectively destroy munitions of all shapes and sizes—providing complete containment of the neutralization process, and protecting operators, the community and environment.

ASSESSMENT TECHNOLOGIES INCLUDE:

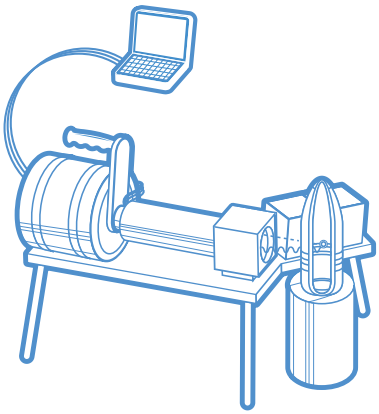

PINS

The ***Portable Isotopic Neutron Spectroscopy System (PINS)*** accurately detects the presence of chemical elements by using neutron particles to produce a unique energy spectrum emitted by chemicals inside the munition.

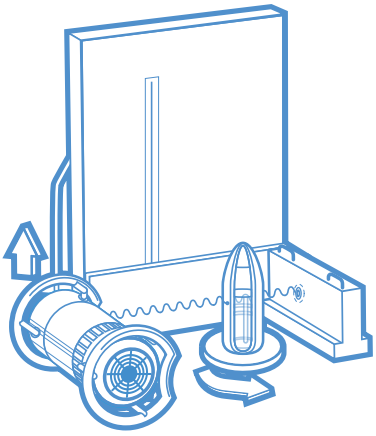

DRCT

NSCMP's ***Digital Radiography and Computed Tomography System (DRCT)*** and other X-ray systems use X-ray technology to vertically scan recovered munitions on a rotating platform, reproducing a high-quality digital image of their interiors to determine whether a liquid fill is present and as well as the explosive configuration of the item.

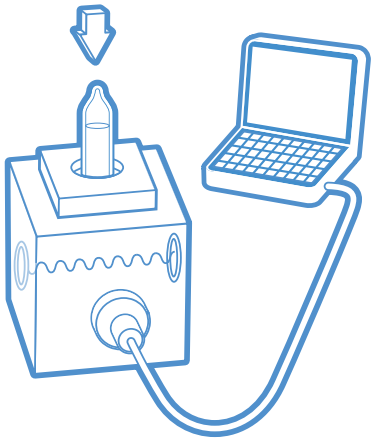

RAMAN SPECTROMETER

Raman Spectrometry allows NSCMP to identify the contents of the glass vials and bottles that were part of Chemical Agent Identification Sets (CAIS), used for training decades ago. This technology uses a fiber optic probe and laser.

TREATMENT TECHNOLOGIES INCLUDE:

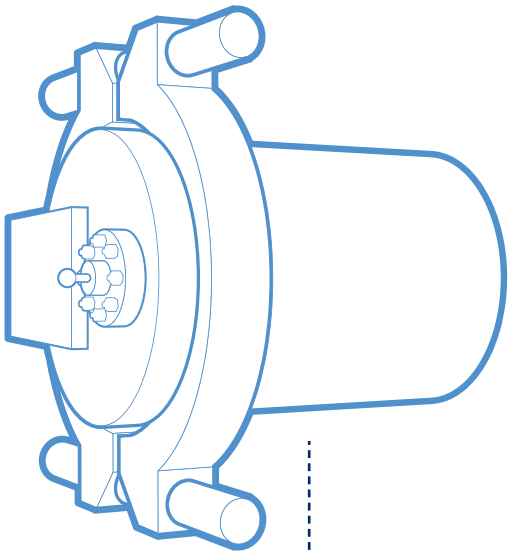

EDS

The ***Explosive Destructive System (EDS)*** uses cutting charges to explosively access chemical munitions, eliminating their explosive capacity before the chemical agent is neutralized by the addition of a liquid reagent. The system's main component—a sealed, stainless steel vessel—contains all the blast, vapor and fragments from the process. Treatment is confirmed by sampling residual liquid and air from the vessel prior to reopening the EDS. NSCMP maintains five transportable EDS units to support both planned and emergency operations.

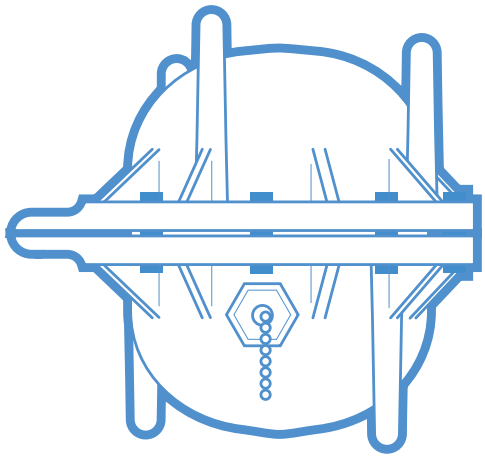

SCANS

The ***Single CAIS Access and Neutralization System (SCANS)*** treats the small quantities of chemical agent found in CAIS items. CAIS items were used to train Soldiers in the identification and disposal of chemical warfare agent.

Non-Stockpile Chemical Materiel Project overview (continued)

Treaty Milestones

NSCMP leads the nation in the development and utilization of advanced technology to treat recovered chemical warfare materiel. In 1997, the United States entered into force of the Chemical Weapons Convention (CWC), an international treaty requiring the destruction of chemical weapons. The U.S. Army assigned NSCMP with four destruction missions. NSCMP safely completed all four mission areas ahead of treaty schedule:

- ***Binary Chemical Weapons – Completed November 2007:*** Binary chemical weapons were designed to form lethal chemical agents by mixing two non-lethal chemicals during flight to a target. NSCMP safely completed destruction of the binary chemical weapon inventory.
- ***Former Chemical Warfare Production Facilities – Completed December 2006 (four months ahead of the deadline):*** These included government facilities and equipment that produced chemical agent, and precursors and components for chemical weapons. NSCMP completed destruction of the facilities, located at Newport Chemical Depot, Ind.; Pine Bluff Arsenal, Ark.; Rocky Mountain Arsenal, Colo.; Aberdeen Proving Ground, Md.; and Muscle Shoals, Ala.
- ***Miscellaneous Chemical Warfare Materiel – Treaty items completed 2002:*** This category includes both treaty and non-treaty items, such as unfilled munitions,support equipment and devices designed for use with chemical weapons. These include complete assembled rounds without chemical fill and with or without bursters and fuzes, simulant-filled munitions, inert munitions, dummy munitions, bursters and fuzes, empty rocket warheads and motors, projectile cases, other metal and plastic part components, research and development compounds, chemical samples and ton containers.
- ***Recovered Chemical Warfare Materiel – Completed April 2010:*** In April 2010, operators at the Pine Bluff Explosive Destruction System located at Pine Bluff Arsenal, Ark., destroyed the last munition of its inventory—marking the destruction of all non-stockpile materiel declared prior to when the United States entered into force of the Chemical Weapons Convention.

NSCMP destroyed the nation's former chemical weapons production facilities, including Newport Chemical Depot, Ind., which housed the plant that produced the nerve agent VX. Demolition of the facility was officially complete on July 20, 2006.

NSCMP completed operations at a wet air oxidation (WAO) facility in Texas Nov. 27, 2007. The WAO treated wastewater from the neutralization of binary chemicals, the final step in the project to destroy binary chemical weapons.